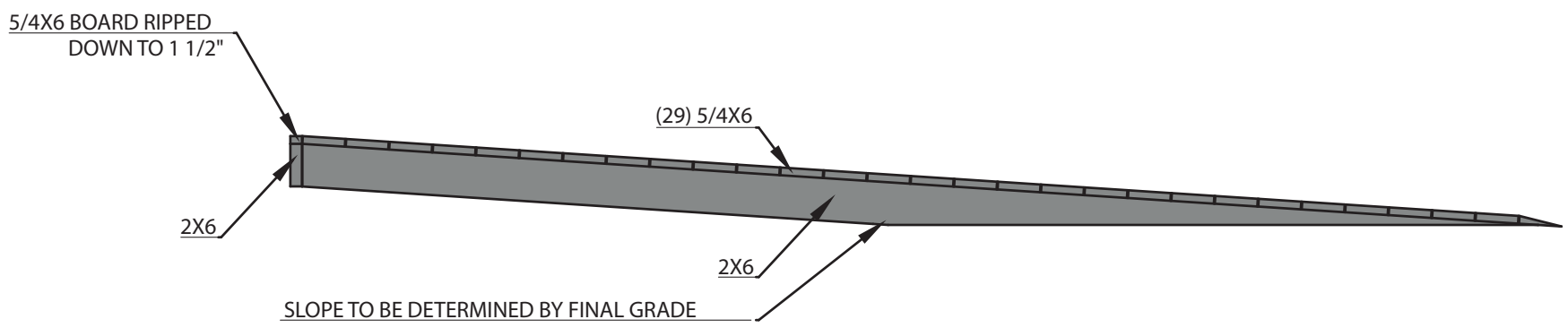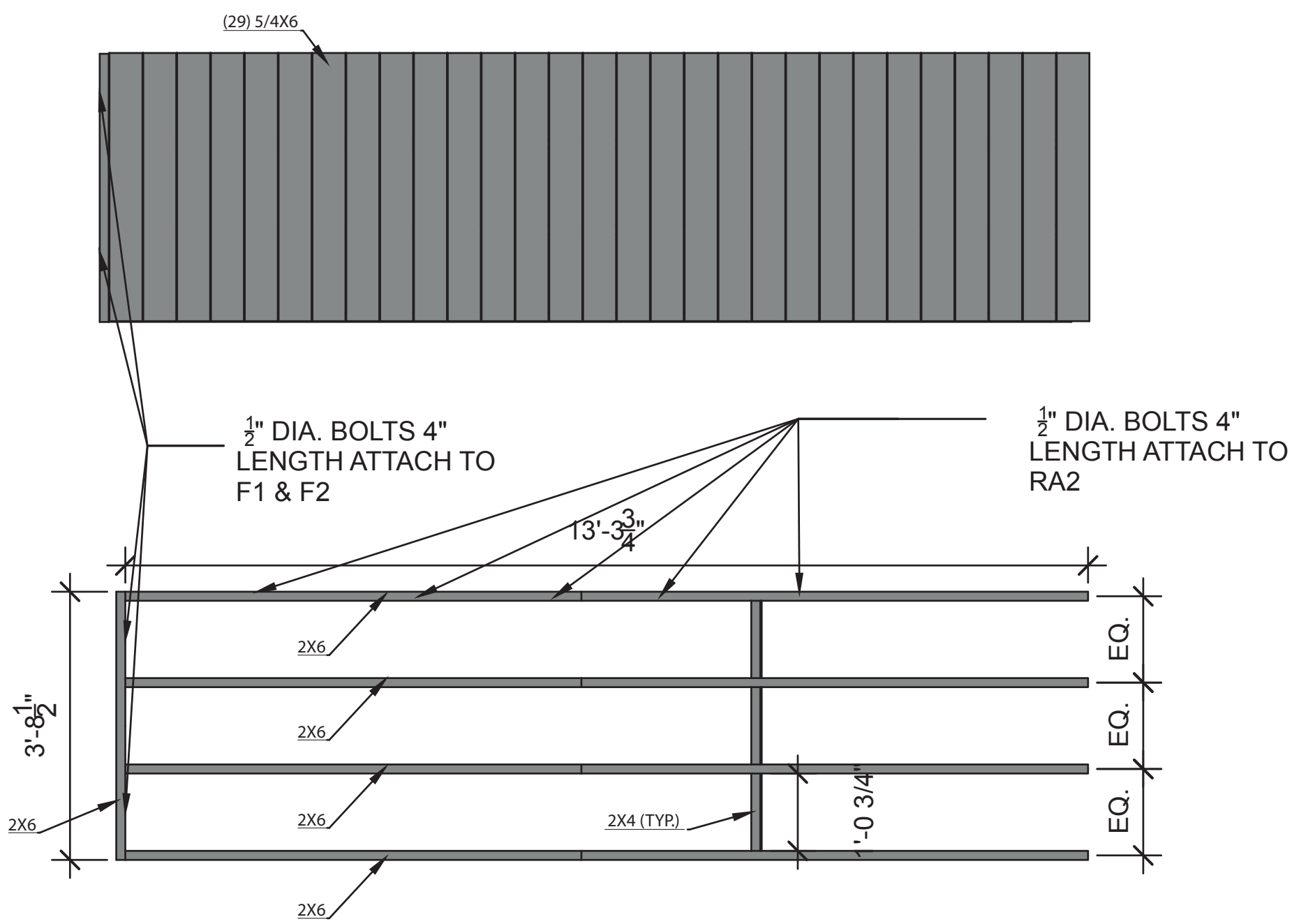RA-1 & RA-2 TAKE-OFF SCHEDULE		
UNIT	LENGTH	NUMBER
2X6	13'-3 3/4"	4
2X4	1'-0 3/4"	3
2X6	3'-8 1/2"	1
5/4X6	3'-8 1/2"	29
5/4X1 1/2"	3'-8 1/2"	1